DWG. NO.
S-HC2-TS-19-2

INSTALLATION HARDWARE:
(4) 10-32 x 5/8" TRUSS HEAD SCREWS

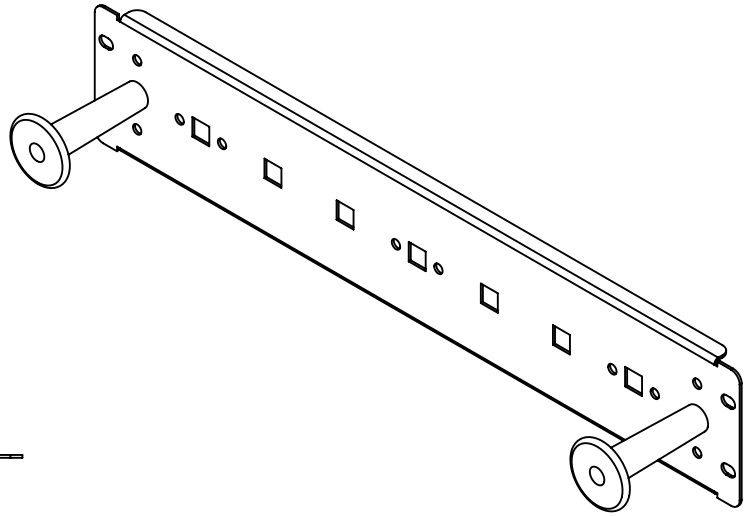

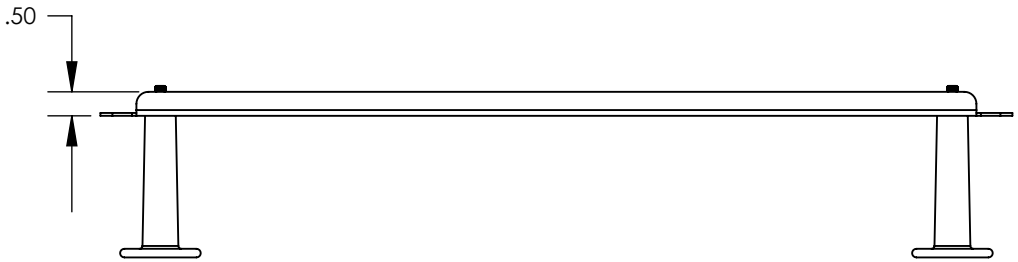

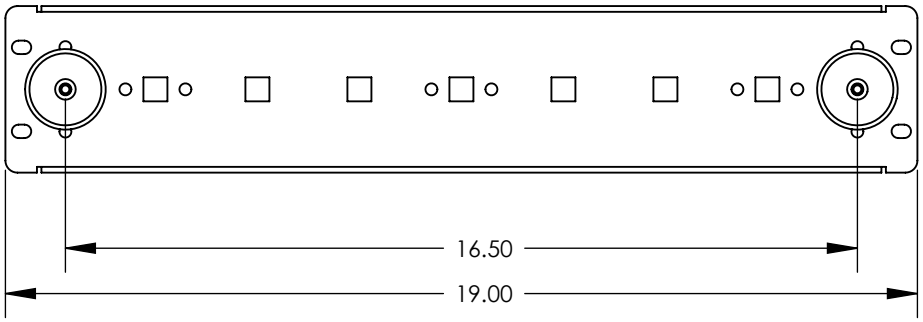

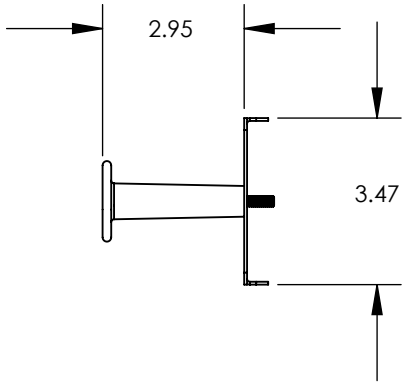

electrorack
ENCLOSURE PRODUCTS

PROPRIETARY AND CONFIDENTIAL
This drawing embodies a confidential proprietary design owned by Electrorack Products Company and all design, manufacturing, reproduction, use and sales rights regarding this drawing are reserved to Electrorack Products Company. The recipient of this drawing assumes custody thereof and agrees that the information contained herein shall not be used, duplicated or disclosed to reproduce articles or subject matter therein without written permission of Electrorack Products Company.

TITLE:
2U HORIZONTAL CABLE ADJUSTABLE SPOOL

FINISH

MATERIAL
16 GA (.060") STEEL

REV DATE
02/13/08

SHEET 1 OF 1