DWG. NO.
S-CS2-2

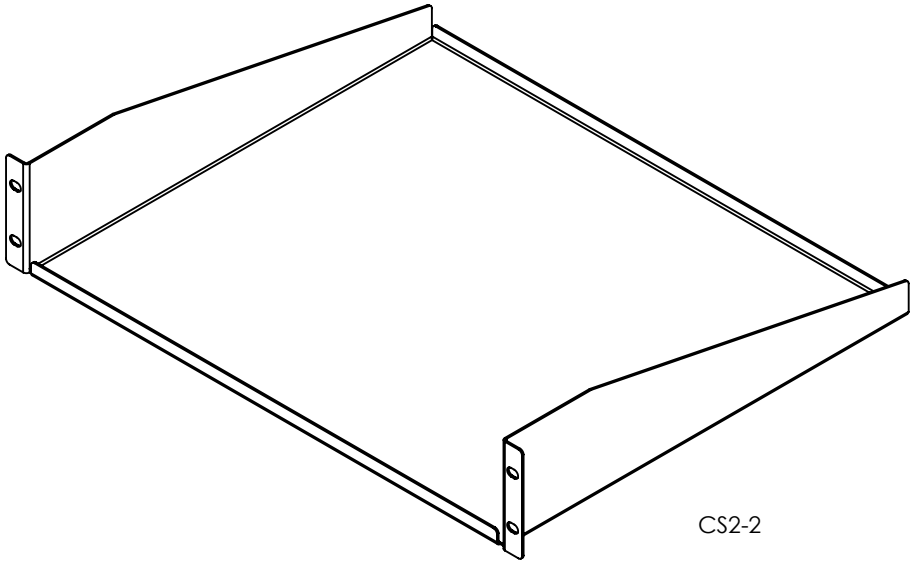

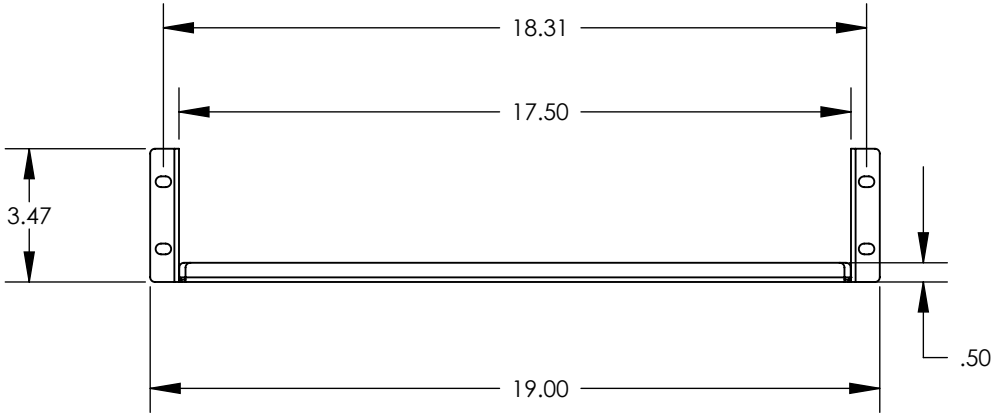

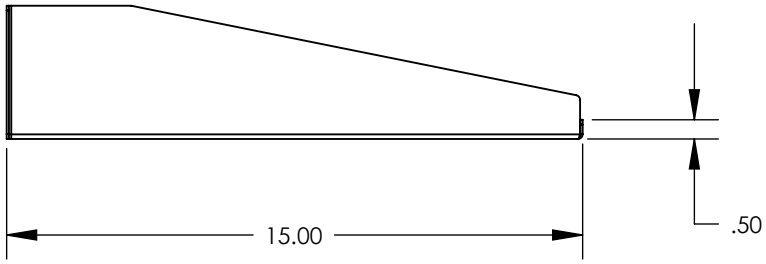

electrorack
ENCLOSURE PRODUCTS

PROPRIETARY AND CONFIDENTIAL
This drawing embodies a confidential proprietary design owned by Electrorack Products Company and all design, manufacturing, reproduction, use and sales rights regarding this drawing are reserved to Electrorack Products Company. The recipient of this drawing assumes custody thereof and agrees that the information contained herein shall not be used, duplicated or disclosed to reproduce articles or subject matter therein without written permission of Electrorack Products Company.

TITLE:
CANTILEVERED SHELF, 2U SOLID, 19" EIA X 15"D

FINISH: BLACK POWDER COAT	REV DATE: 06/10/07
MATERIAL: 16 GA (0.060") STEEL	SHEET 1 OF 1